STATEMENT OF POLICY # 33

ELECTRONIC TERMINAL ACCESS AND ELECTRONIC SWITCHING OF TRANSACTIONS

The Nebraska Department of Banking and Finance ("Department") sets forth Statement of Policy #33 ("SOP #33") regarding automated teller machine (ATM) and point-of-sale (POS) terminal access and the electronic switching of transactions. Neb. Rev. Stat. § 8-157.01 is SOP #33's legislative focal point.

For purposes of SOP #33, "switch" means any facility where electronic impulses or other indicia of a transaction originating at an ATM or POS terminal are received and are routed and transmitted to a financial institution, data processing center, or other switch, wherever located. A switch may also be a data processing center. For purposes of SOP #33, "Nebraska financial institution" means any state-chartered or federally chartered bank, savings bank, building and loan association, savings and loan association, or credit union, or a subsidiary of any such entity that establishes an ATM or POS terminal within the State of Nebraska, and switches that route electronic transactions for a Nebraska financial institution's ATM and/or its POS terminal.

Access to ATMs and POS Terminals

Customers can access their financial institution accounts electronically through an ATM or POS terminal established by their own financial institution or another, affiliated or unaffiliated, financial institution. If access is through another financial institution, that institution is considered an "establishing financial institution." The accessing customer's Nebraska financial institution is considered a "user financial institution." The user financial institution, through its customer, uses the establishing financial institution's ATM or POS terminal.

Section 8-157.01(2) provides:

> *All automatic teller machines must be made available on a nondiscriminating basis, for use by customers of any financial institution which has a main chartered office or approved branch located in the State of Nebraska which becomes a user financial institution, through methods, fees, and processes that the establishing financial institution has provided for switching transactions.*

Section 8-157.01(5) provides:

> *A point-of-sale terminal may be established at any point within this state. A financial institution may contract with a seller of goods and*

> *services or any other third party for the operation of point-of-sale terminals. A point-of-sale terminal shall be made available on a nondiscriminating basis for use by customers of any financial institution which has a main chartered office or approved branch located in the State of Nebraska which becomes a user financial institution. Nothing in this subsection shall prohibit payment of fees to a financial institution which issues an access device used to initiate electronic funds transfer transactions at a point-of-sale terminal.*

Fees for ATM and POS transactions are to be nondiscriminatory. If the user financial fees are not equal, the establishing financial institution must be able to show how the fee is nondiscriminatory. (See, Nebraska Attorney General Opinion #92124, "Fee Arrangements Regarding Use of Electronic Terminals (ATMs) By Financial Institutions" at ago.ne.gov.)

There are two limited statutory exceptions that allow for the charging of fees that would otherwise be discriminatory. The first exception for ATM fees is found in Section 8-157.01(1); that provision does not require the charging of ATM fees between affiliate financial institutions. The second exception for ATM fees is found in Section 8-157.01(18), which allows a Nebraska financial institution to participate in a national automatic teller machine program.

An establishing institution is not required to offer the same services at each of its ATMs or POS Terminals.

Access to Switches

Section 8-157.01(10) provides that:

> *All financial institutions shall be given an equal opportunity for the use of and access to a switch, and no discrimination shall exist or preferential treatment be given in either the operation of such switch or the charges for use thereof. The operation of such switch shall be with the approval of the director. Approval of such switch shall be given by the director when he or she determines that its design and operation are such as to provide access thereto and use thereof by any financial institution without discrimination as to access or cost of its use.*

The statutory language regarding switch fees is more emphatic than the language regarding ATM and POS fees. Charging an equal fee for the same switch transaction is a mandate of Section 8-157.01(10). (See, Nebraska Attorney General Opinion #13-001, "Non-discriminatory Operation Of And Fees For Switches Used By Automatic Teller Machines And Other Equipment To

Transmit Electronic Information for Financial Institutions in Nebraska" at ago.ne.gov.)

Determining What Comprises an ATM, POS Terminal, or Switch Fee

The Department has determined that all costs and benefits associated with an ATM, POS terminal, or switch transaction are included in the definition of "fee."

Those costs and benefits include, but are not limited to: all transactional charges, a signing bonus, a membership fee, volume pricing, discounts, the awarding of "prizes," period(s) where fees are not charged, incentive pricing, and related items.

ATM Surcharges

Section 8-157.01(4) allows for an ATM transaction surcharge. Prior notice of the surcharge must be provided to the ATM customer. The required notice is listed in Section 8-157.01(4).

Appendix A

Appendix A sets forth "equal access" by way of written examples and by diagram.

Applying to Become an ATM, POS Terminal, or Switch

All ATMs and POS terminals are established by a financial institution. There is no ATM or POS terminal application; however, the Director can ask a financial institution for a listing of all its ATMs or POS terminals. In addition, the Director may use his or her enforcement powers if appropriate.

Entities seeking to operate an electronic switch in Nebraska must apply for approval using the Department "Application for Switch Approval" or "Notice of Switch Approval for a Federally Chartered Financial Institution." The forms for approval or notification are available at www.ndbf.ne.gov or upon request from the Department.

The switch must show that it provides equal access to all Nebraska financial institutions and that the switch will operate in accordance with Section 8-157.01(10).

This Statement of Policy is effective _____, 2013.

Effective Date: March 1, 2012
Revised: September 18, 2012
_____, 2013

APPENDIX A

Applying SOP #33

(1) ATM and POS Terminal Fee. Bank A and Bank B offer debit cards. The debit cards are issued by Banks A and B, or a third-party issues the card on the bank's behalf. Bank A and Bank B must charge equal ATM and POS terminal fees to each financial institution that becomes a user financial institution of establishing Bank A or Bank B's ATM or Point of Sale terminal, unless Bank A or Bank B can demonstrate why a non-equal fee is nondiscriminatory, pursuant to Section 8-157.01.

Bank A and Bank B are responsible for the ATM or POS terminal fee that is charged to a user institution. In the diagram shown in (3) below, a user financial institution is represented by both Bank Y and Bank Z. Bank A and Bank B can charge fees to user financial institutions Bank Y and Bank Z.

Bank A's ATM and POS terminal fees may be different than the ATM or POS terminal fee that Bank B charges user financial institutions for the same transaction. That is allowed. However, Bank A must charge all user financial institutions the same fee for the same type of transaction. Bank B must charge all of its user financial institutions the same fee for the same type of transaction.

The total transaction cost of a Bank A or Bank B ATM or POS terminal transaction may vary to a user financial institutions due to the use of a particular switch (see diagram, customers 2 and 3). Switch fees influence the overall cost of the ATM or POS terminal transaction.

(2) Switch Fee. Switch D must charge the same fee for the same transaction to Bank A and Bank B. Likewise, switch E must charge the same fee for the same transaction to Bank A and Bank B. However, switches D and E may have fees that are different from one another. Each switch is responsible for charging equal fees for the same transaction it provides in an ATM or POS terminal transaction.

(3) Diagram of ATM, POS, and Switch Transaction (see next page).

APPENDIX A (continued)

- Bank Y has Customer 1 that uses Bank A's ATM.
- Bank Z has three customers. One Customer 2 uses Bank A's ATM. Customers 3 and 4 use Bank B's ATM.
- For purposes of the Appendix A diagram, Customers 1,2,3, and 4 each conduct the same type of ATM transaction.

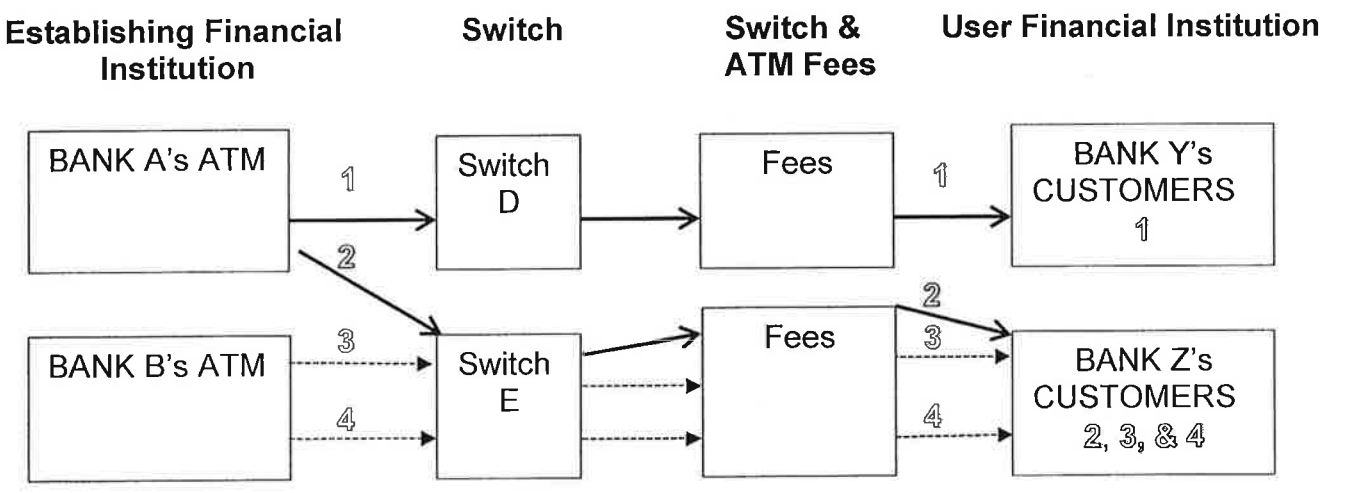

- Bank A must charge Bank Y and Bank Z the same ATM fee, unless Bank A meets a statutory exclusion or the fee is otherwise nondiscriminatory.
- Switch E must charge Bank A and Bank B the same fee for the same type of transaction.
- For a Point of Sale transaction, replace "ATM" with POS.